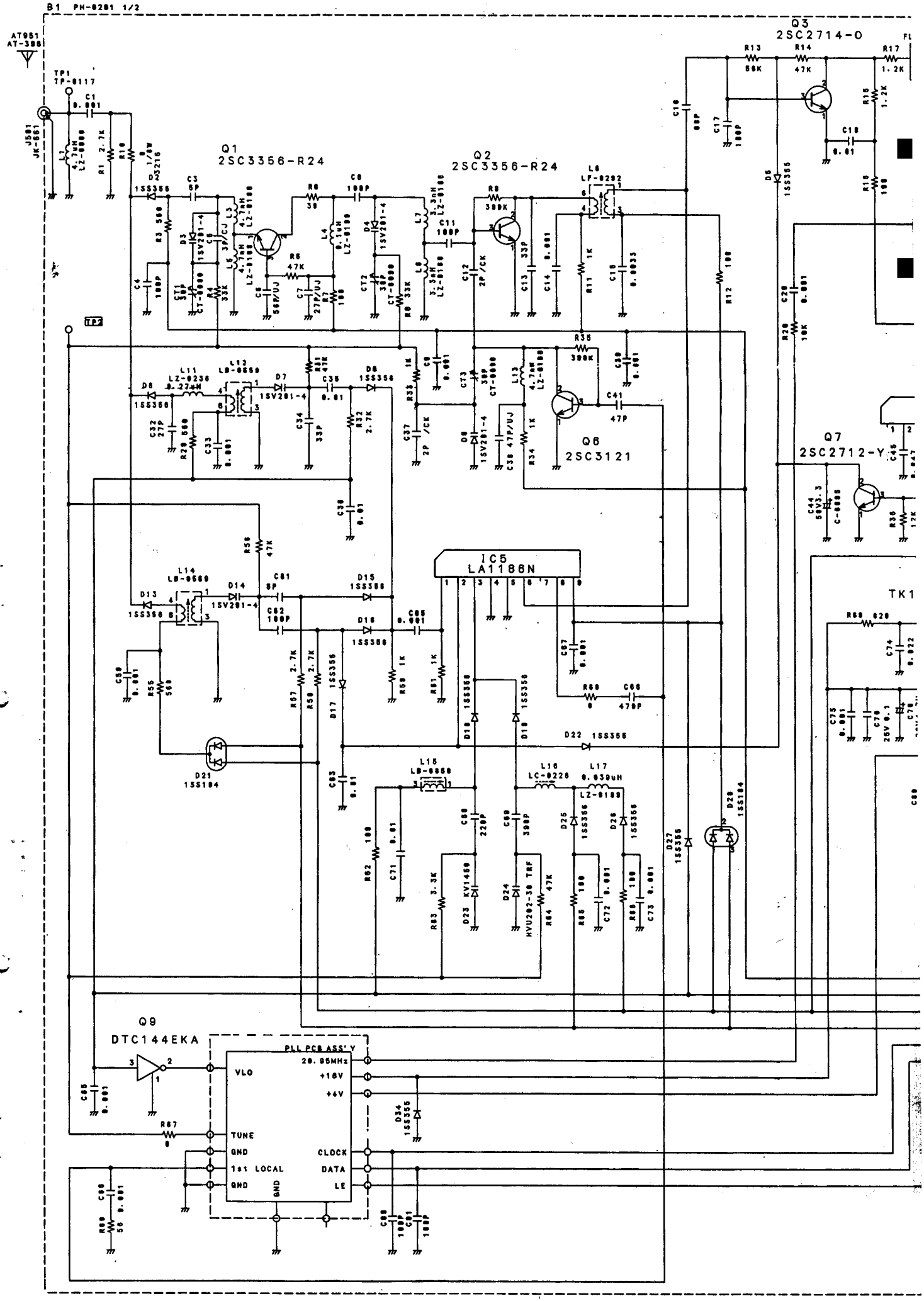
B1 PH-8281 1/2
AT951
AT-388
TP1
TP-0117
J501
JK-661
Q1
2SC3356-R24
Q2
2SC3356-R24
Q3
2SC2714-O
Q6
2SC3121
Q7
2SC2712-Y
IC5
LA1186N
Q9
DTC144EKA
PLL PCB ASS'Y
VLO
TUNE
GND
1st LOCAL
GND
20.85MHz
+16V
+4V
CLOCK
DATA
LE
TK1

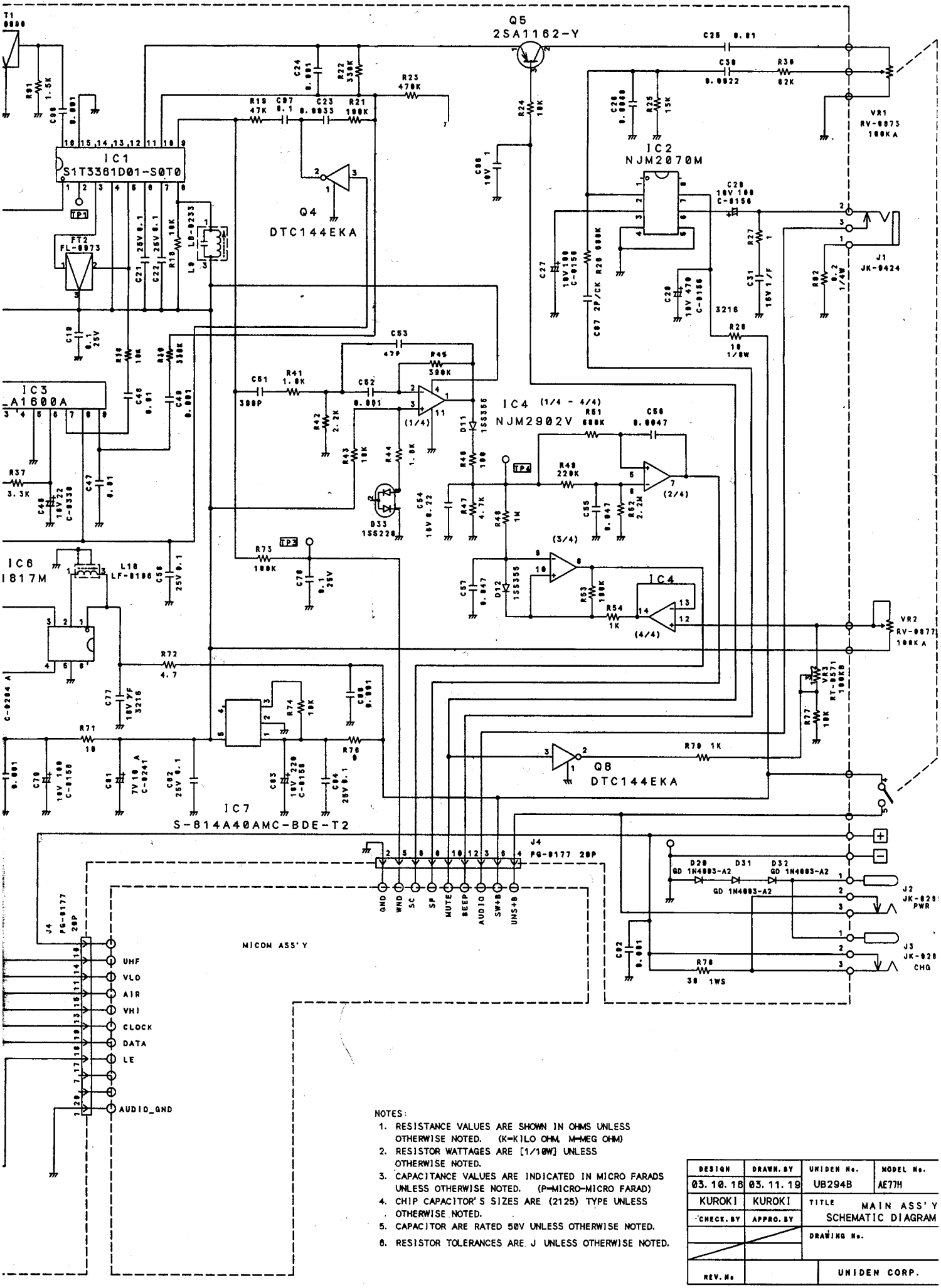

NOTES:

1. RESISTANCE VALUES ARE SHOWN IN OHMS UNLESS OTHERWISE NOTED. (K=KILO OHM, M=MEG OHM)
2. RESISTOR WATTAGES ARE [1/10W] UNLESS OTHERWISE NOTED.
3. CAPACITANCE VALUES ARE INDICATED IN MICRO FARADS UNLESS OTHERWISE NOTED. (P=MICRO-MICRO FARAD)
4. CHIP CAPACITOR'S SIZES ARE (2125) TYPE UNLESS OTHERWISE NOTED.
5. CAPACITOR ARE RATED 50V UNLESS OTHERWISE NOTED.
6. RESISTOR TOLERANCES ARE J UNLESS OTHERWISE NOTED.

DESIGN	DRAWN. BY	UNIDEN No.	MODEL No.
03.10.16	03.11.19	UB294B	AE77H
KUROKI	KUROKI	TITLE	MAIN ASS'Y SCHEMATIC DIAGRAM
CHECK. BY	APPRO. BY		
		DRAWING No.	
REV. No		UNIDEN CORP.	